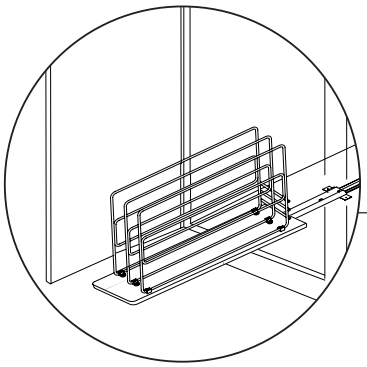

WOOD & WIRE TRAY DIVIDER ROLL OUT

Installation Instructions

Inspect all parts and read all instructions prior to beginning assembly and installation.

Parts Included

A. Tray Dividers
B. Pre-assembled Mounting Board
C. Mounting Screw Package

A

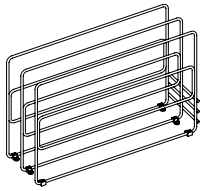

B

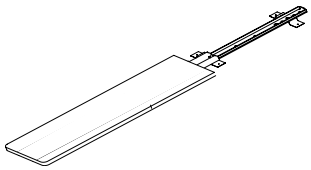

C

Tools Required

- Phillips Screwdriver
- Measuring Tape
- Pencil
- Drill with 1/16˝ bit for pilot holes (optional)

Product Assemblies

TDRO-CW-6
TDRO-CW-9

Step 1 Place sliding base assembly on cabinet floor, right behind the back edge of the cabinet face frame. If installing in a frameless cabinet, measure 1/2" back from front of cabinet opening, and align sliding base assembly parallel to cabinet opening. Close door to make sure the assembly will not hold cabinet door open. Also, check to see if unit will clear the door opening when fully extended. Once position is determined, extend mounting board and fasten in place using four mounting screws provided and the Phillips head screwdriver.

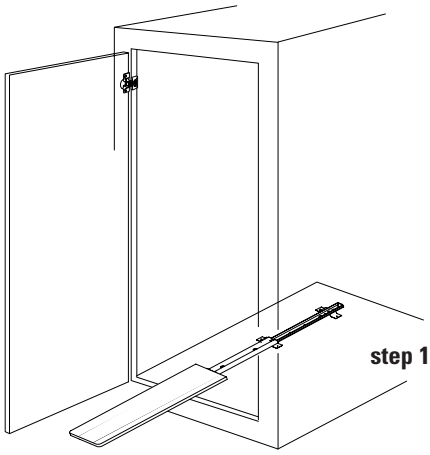

step 1

Optional step

Mark placement of mounting holes with a pencil, remove sliding base assembly and drill pilot holes for fastening screws. Place sliding base assembly back into position and fasten with the provided screws.

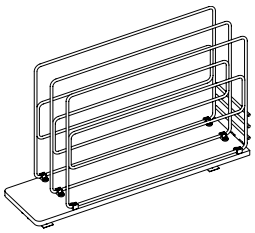

step 2

Step 2 Fit tray dividers onto mounting board. as shown in Figure 2. Installation is now complete.

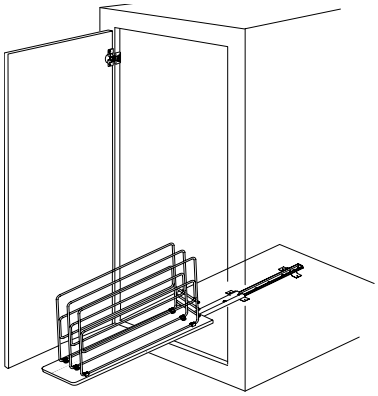

Real Solutions
For Real Life.™

KNAPE & VOGT MANUFACTURING COMPANY
2700 Oak industrial Dr., Grand Rapids, MI 49505
800.253.1561 www.kv.com

RN-293EFS 02/05
© 2003 Knape & Vogt Manufacturing Company. All rights reserved.