STOCK LOCKS®

A PRODUCT OF CompX TIMBERLINE
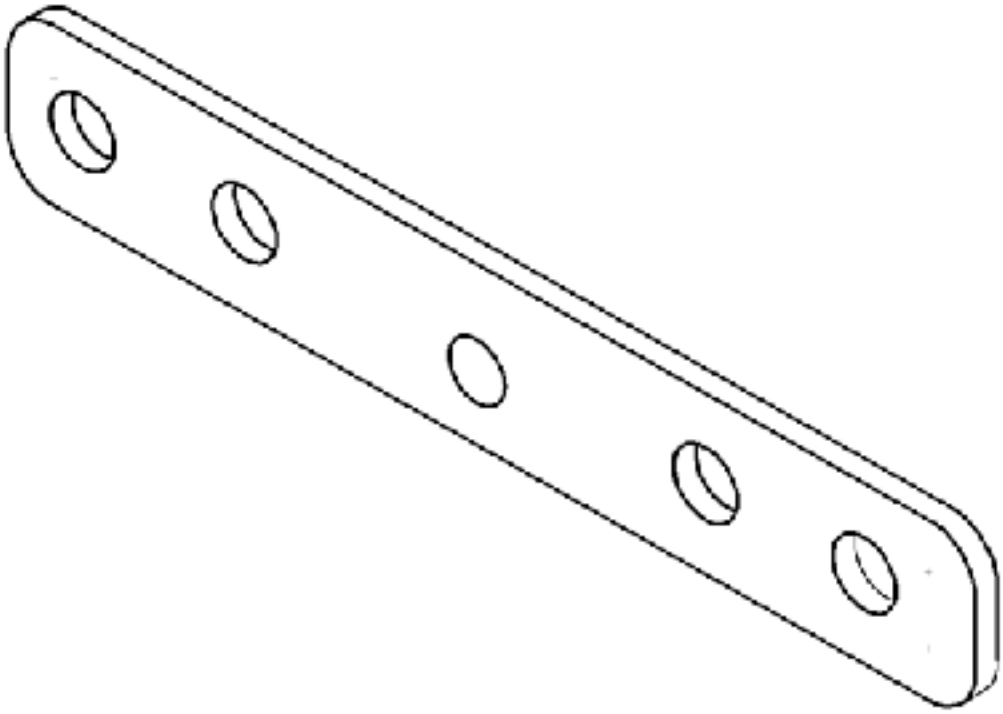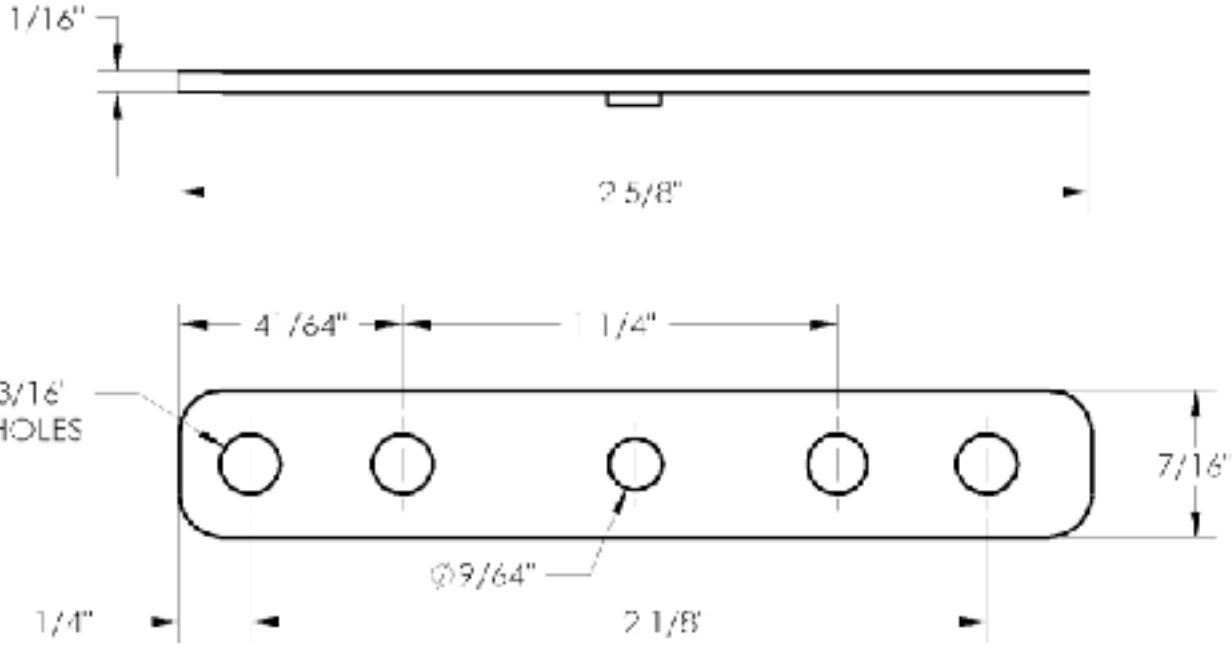
LR-100 LOCKBAR RETAINER